MERCURY (25)
Serial Nbr Range: 9378116 THRU 9415100 (BEL)

GEAR HOUSING (Prop Shaft) (Screw Inserted from Bottom)

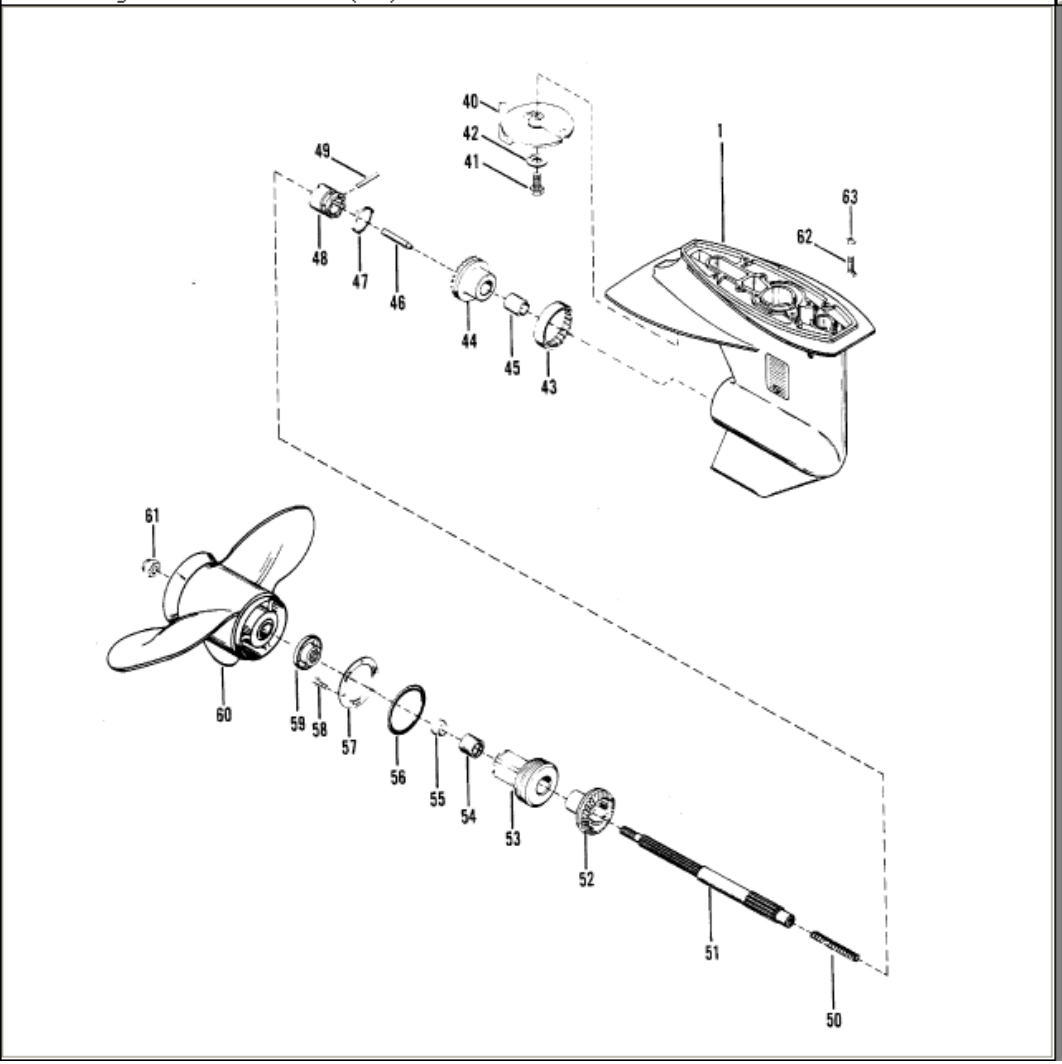

Parts List

Ref	Class	Part	Description	Qty	Comment	Footnote
-	1653	8157A 7	GEAR HOUSING ASSEMBLY, COI	1		
-	1653	8157A 8	GEAR HOUSING ASSEMBLY, COI	1		
1	1653	8157A 6	GEAR HOUSING ASSEMBLY	1		
40		94286	TRIM TAB	1		
41	10	40003 52	SCREW, TRIM TAB (20MM)	1		
42	14	85169	TAB WASHER, TRIM TAB SCRE	1		
43	31	85555A 1	ROLLER BEARING ASSEMBLY,	1		
44	43	85135A 2	FORWARD GEAR	1		
45	23	85557	BUSHING, FORWARD GEAR	1		
46		85094	CAM FOLLOWER	1		
47	24	38114	SPRING, RETAINING - CROSS F	1		
48	52	85133	CLUTCH, SLIDING	1		
49	17	85093	CROSS PIN, CLUTCH TO PROP	1		
50	24	88680	SPRING, COMPRESSION - PRO	1		
51	44	85134	PROPELLER SHAFT	1		
52	43	85131	REVERSE GEAR	1		
53		85136A 1	BEARING CARRIER ASSEMBLY	1		
54	31	21739	ROLLER BEARING	1		
55	26	98283	OIL SEAL, BEARING CARRIEF	1		12
56	25	85549	"O" RING, BEARING CARRIER	1		12,15
57		87293	PLATE, GEAR HOUSING	1		
58	10	91909	SCREW, COVER TO GEAR HOU	3		
59		85128A 1	THRUST HUB ASSEMBLY, PROP	1		
60	48	86848A 4	PROPELLER ASSEMBLY	1		
61	11	88228	PROPELLER NUT	1		
62	10	40003 53	SCREW, GEAR HOUSING (25MM)	4		
63	12	40023 17	WASHER, GEAR HOUSING SCRE	4		
--	26	85090A1	SEAL REPAIR KIT	--	CONTENTS INDICATED BY FOO	
--	27	41499A84	GASKET SET	--	CONTENTS INDICATED BY FOO	